Instruction manual

2026-10-08

Slicer gear, blade 300 mm serrated
GMS 300 Z

www.rmgastro.com

TABLE OF CONTENTS

1. DECLARATION OF CONFORMITY 3

2. TECHNICAL DATA 3

3. LOCATION ELECTRIC 3

4. SAFETY MEASURES FOR FIRE PROTECTION 3

5. INSTALLATION 4

6. CONNECTING THE ELECTRICAL CABLE TO THE NETWORK 4

7. INSTRUCTIONS FOR USE 5

8. CLEANING AND MAINTENANCE 12

1. DECLARATION OF CONFORMITY

Decree of the Ministry of Health of the Czech Republic no. 38/2001 Coll. of 19 January 2001 Regulation (EC) No 1907/2006 - Registration, Evaluation, Authorisation and Restriction of Chemicals (REACH) Regulation of the European Parliament and Council Regulation (EC) no. 1935/2004 of 27 October 2004

The products meet the requirements of §26 of Act No.258/2000 as amended. The products meet the requirements of RoHS Directive 2015/863/EU, 10/2011, 517/2014, 2015/1094, 2015/1095.

Attention, the manufacturer gives up any responsibility in case of direct and indirect damage that is relate to poor installation, incorrect intervention or adjustments, insufficient maintenance, incorrect by using and which are eventually caused by other causes that the points referred to in the conditions sales. This appliance is intended only for professional use and must be operated by qualified by persons. Parts that have been secured by the manufacturer or authorized worker after the setting rebuild.

2. TECHNICAL DATA

The label with technical data is located on the side or back panel of the device. Please read the wiring diagram and all the following information in the attached manual before installation.

Net Width [mm]	Net Depth [mm]	Net Height [mm]	Net Weight [kg]	Power electric [kW]
580	515	515	20.80	0.320

Loading	Blade diameter [mm]	Gross depth [mm]	Gross Height [mm]	Gross Volume [m3]
230 V / 1N - 50 Hz	300	530	560	0.181

Net Volume [m3]	Gross Weight [kg]	Gross Width [mm]
0.143	23.40	610

3. LOCATION ELECTRIC

For the correct operation and placement of the appliance, it is necessary to observe the following all prescribed standards for the given market. Unpack the device and check that the device has not been damaged during transport. Place the device on a horizontal surface (maximum unevenness up to 2°). Small unevenness can be leveled with adjustable feet. If the device will be placed in such a way that it will be in contact with the walls of the furniture, these must withstand a temperature of up to 60°C. Installation, adjustment, commissioning must be performed by a qualified person who is authorized to perform such operations, according to applicable standards. The device can be installed separately or in series with devices of our production. A minimum distance of 10 cm from flammable materials must be observed. In this case, it is necessary to secure the appropriate modifications to ensure the thermal insulation of the combustible parts. The appliance must only be installed on a non-flammable surface or against a non-flammable wall. **Parts of the appliance provided by the manufacturer. or his representative, the worker performing the installation may not rebuild the product.**

4. SAFETY MEASURES FOR FIRE PROTECTION

- the appliance may only be operated by adults
- the appliance may be used safely in accordance with applicable market standards:

Fire protection in spaces with special risk or danger

Protection against the effects of heat

- the appliance must be placed so that it stands or hangs firmly on a non-combustible surface

Objects of flammable substances must not be placed on the appliance at a distance less than a safe distance from it (the smallest distance between the appliance and flammable substances is 10 cm).

Table: degree of flammability of building materials included in st. flammability of substances and products

Degree of flammability	Building materials
A - non-flammable	granite, sandstone, concrete, brick, ceramic tiles, plaster
B - Not easily flammable	Acumin, Heraclitus, Lihnos, Itaver
C1 - highly flammable	wood, hardwood, plywood, hard paper, umakart
C2 - moderately flammable	chipboards, solodur, cork boards, rubber, flooring
C3 - Highly flammable	wood fiber boards, polystyrene, polyurethane, PVC

- information on the degree of flammability of common building materials is given in the table above. Appliances must be installed in a safe manner. During installation, the relevant design, safety and hygiene regulations must also be respected:
- fire safety of local appliances and heat sources
- fire protection in areas with special risk or danger
- protection against the effects of heat

5. INSTALLATION

Important: The manufacturer does not provide any warranty for defects arising as a result of incorrect use, failure to follow the instructions contained in the attached user manual and mishandling of appliances. Installation, modification and repair of appliances for large kitchens, as well as their dismantling due to possible damage to the gas supply, can only be carried out on the basis of a maintenance contract, this contract can be concluded with an authorized dealer, while technical regulations and standards and regulations must be observed regarding installation, electrical supply, gas connection and work safety. Technical instructions for installation and adjustment, for use by specialized technicians ONLY. The instructions that follow refer to a technician qualified for installation to carry out all operations in the most correct manner and according to the applicable standards. Any activity related to regulation etc. must only be performed with the device disconnected from the network. If it is necessary to keep the appliance under voltage, the utmost care must be taken. The type of appliance for extraction is declared on the nameplate, it is an A1 appliance.

6. CONNECTING THE ELECTRICAL CABLE TO THE NETWORK

Installation of the electrical supply - this supply must be separately secured. Ato with the corresponding circuit breaker of rated current depending on the power input of the installed device. Check the power consumption of the device on the production label on the back panel (or side) of the device. The connected ground wire must be longer than the other wires. Connect the device directly to the network, it is necessary to insert a switch between the device and the device with a minimum distance of 3 mm between the individual contacts, which corresponds to the applicable standards and load. The earth supply (yellow-green) must not be interrupted by this switch. Connect the device to the mains if the socket has adequate protection. In any case, the supply cable must be located so that it does not reach a temperature of 50 degrees higher than the environment at any point. Before the appliance is connected to the network, it is necessary to first make sure that:

- the supply circuit breaker and the internal distribution can withstand the current load of the appliance (see matrix label)
- the distribution board is equipped with effective grounding according to the standards of the relevant market and the conditions given by law
- the socket or switch in the supply is easily accessible from the appliance
- the electrical supply to the device must be made of oil-resistant material

We disclaim any responsibility in the event that these standards are not respected and in the event of a violation of the above principles. Before first use, you must clean the device, see chapter """"cleaning and maintenance""""". The appliance must be grounded using a screw with a grounding mark.

- Do not insert the plug of the power supply into the electrical outlet. sockets and do not pull out the zel. sockets with wet hands and pulling on the power cord!

- Do not use extension cords or multiple sockets.
- **The mains connection point must have a maximum of the following impedance: ZMAX = 0.042 + j 0.026 Ω for the phase conductors and 0.028 + j 0.017 Ω for the neutral conductor.**

Models	Knife diameter (mm)	Knife speed (RPM)	Max. cutting thickness (mm)	Table dimensions (cm)	Voltage (V/Hz)	Power input (W)	Noise (db)	Dimension (cm)	Weight (kg)
GMS 220	220	250	0 - 15	20 x 15	230 / 50	140	< 63	45 x 37 x 36	11,8
GMS 250	250	250	0 - 15	22 x 17	230 / 50	155	< 63	51 x 41 x 37	13,2
GMS 275 XL	275	250	0 - 15	22 x 19	230 / 50	320	< 63	56 x 46 x 43	18
GMS 300	300	250	0 - 15	26 x 21	230 / 50	320	< 63	56 x 46 x 45	20

Installation of the electrical supply - This supply must be separately fused with an appropriate circuit breaker of rated current depending on the power input of the installed appliance. Check the rating of the instrument on the nameplate (Figure 3). Connect the appliance directly to the mains using the plug on the supply cord. If the appliance is connected to the mains using a mains cable without a plug, it is necessary to insert a switch between the appliance and the mainswith a minimum distance of 3 mm between the contacts, corresponding to the applicable standards and loads. The earth lead (yellow-green) must not be interrupted by this switch.

In any case, the supply cable must be positioned so that at no point does it reach a temperature of 50

degrees higher than the environment. Before the appliance is connected to the mains it is necessary to make sure that:

- the supply circuit breaker and the internal wiring can withstand the load of the appliance (see matrix label)

- the distribution system is equipped with an effective grounding according to the standards (CSN) and conditions given by law

- the socket or switch in the supply is easily accessible from the appliance

We disclaim any liability in the event that these standards are not adhered to and in the event of a breach of the above principles.

Before first use, the protective film must be removed from the instrument and the instrument cleaned, see chapter "Cleaning and Maintenance".

7. INSTRUCTIONS FOR USE

Attention! Before using the appliance, you must remove the protective film and wash it well with water and dish detergent, then wipe it with a damp cloth. Never leave the appliance running unattended.

The device is designed for slicing sausages, smoked meat and cheese.

The equipment may only be used by persons familiar with the operating instructions and authorised to operate the equipment.

Service

Before using the device for the first time, make sure that the mains voltage corresponds to the indication on the device's nameplate. Place the salami or hard cheese on the cutting table, adjust the desired thickness of cut using the cut thickness adjustment knob, knob (B Fig. 4). Turn on the machine with the switch (A fig.3) and start slicing. Move the cutting table towards the knife. Hold the material to be cut using the pressure arm (G fig.1). Always hold the arm by the plastic handle. Use the cutting table to move the food into the cut. (I Fig. 1). Using slight pressure on the arm towards the knife, move the cut food along the cutting

table.When cutting the rest of the material, use the front of the pressure arm. Leave the cut food fall off onto food foil or a suitable tray.

The GMS range of cutting machines is equipped with a safety switch (fig.3). The switch secures the machine against restarting in the event of a power failure. Each time the machine is switched on, first press the "OFF" button before pressing the "ON" button to switch the machine on.

After the accumulation of cut slices, remove them with the machine switched off. After cutting the last slice, move the feeder back and proceed as described above. Hold the sausages perpendicular to the knife and apply slight pressure to the holder when cutting. For cutting salami, etc. when cutting hard cheeses, the groove on the stainless steel knife is used to prevent the cheese from sticking to the cut cheese.

It is recommended to chill the cheese before slicing.
We recommend using a specially sharpened serrated knife to cut hard cheese
Grinding (fig. 8)

Before grinding, first clean the machine thoroughly. Then attach the grinding device to the cutting table (Fig. 8).
On the device you can set the maximum slicing thickness (15mm). Fix the grinding device in the correct position so that the blade of the knife passes between the grinding wheels (Fig. 8). Switch on the machine and bring the travel towards the knife until the pink wheel (figure 8 wheel A) starts to touch the knife. Grind the knife for 10 seconds. Then move the wheel out of the way. Press the upper wheel (figure 8 wheel B) for 5 seconds to clean the cutting edges after sharpening. When the grinding is finished, dismantle the grinding machine.

Note: The sanding wheel "A" is used for sanding and the wheel "B" is used to clean up the edge after sanding.

If the gap between the knife and the cover is greater than 6 mm, the knife must be replaced with a new one.

BEWARE OF INCREASED RISK OF INJURY FROM KNIFE BLADES.
After five grinding cycles using the grinding machine, we recommend that the knife be resharpened in the grinding room.

Technical data

worm gear motor, travelling of the sledge by means of vertical rollers, stainless steel knife with grooves against sticking of cheese during slicing, grinding device, shwide cutting table, safety features (blade cover, blade safety when removing the table, safety switch), cleaning and maintenance of the equipment.

Lubrication is recommended on all guide parts on a regular basis to prevent excessive wear on the sliding parts. Lubrication is carried out by applying a uniform layer of petroleum jelly. In regular maintenance depending on the use of the machine. Proper lubrication of the machine is necessary when the machine is not used for a long time.

Fig. 1

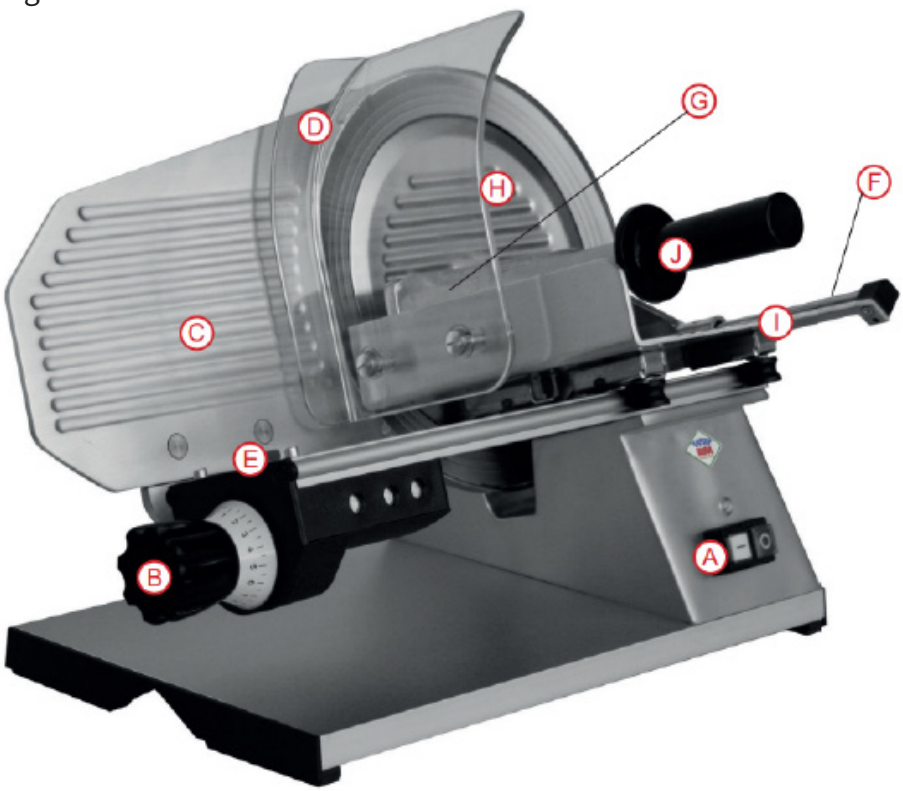

A) Switch

B) Knob for setting the cutting force

C) Cutting force adjustment plate

D) Protective cover

E) Table locking screw

F) Arm travel rod

G) Pressure arm

H) Knife cover

I) Cutting table

J) Shoulder handle

Fig. 2

the arrow shows the direction of rotation of the blade

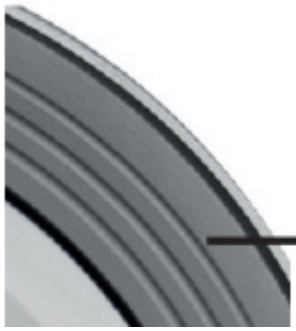

Detail of anti-adhesion grooves on the knife

Fig. 3

A) Main safety switch

B) Device operation light

Fig. 4

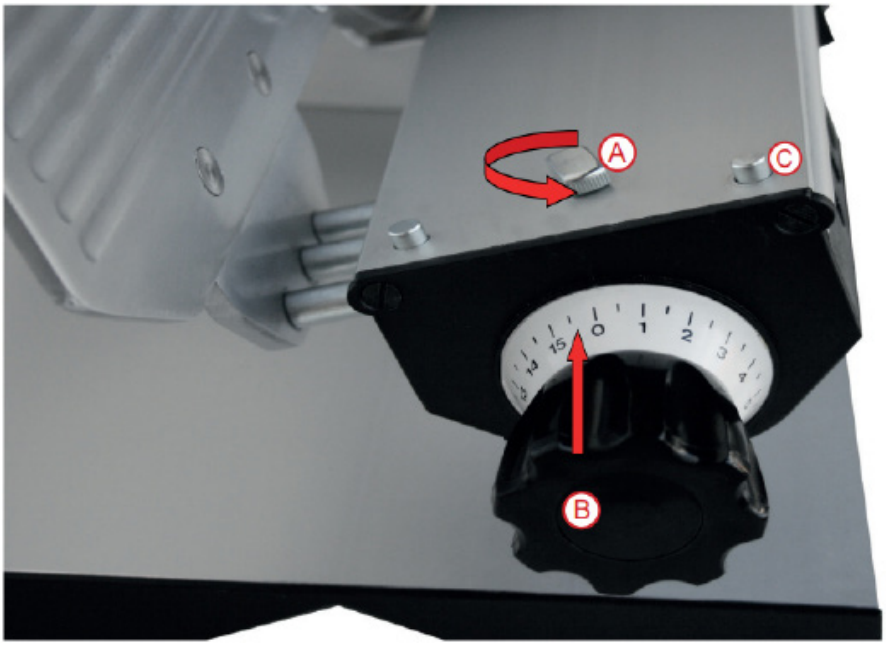

A) Table locking screw

B) Knob for setting the cutting force

C) Travel stops

Fig. 5

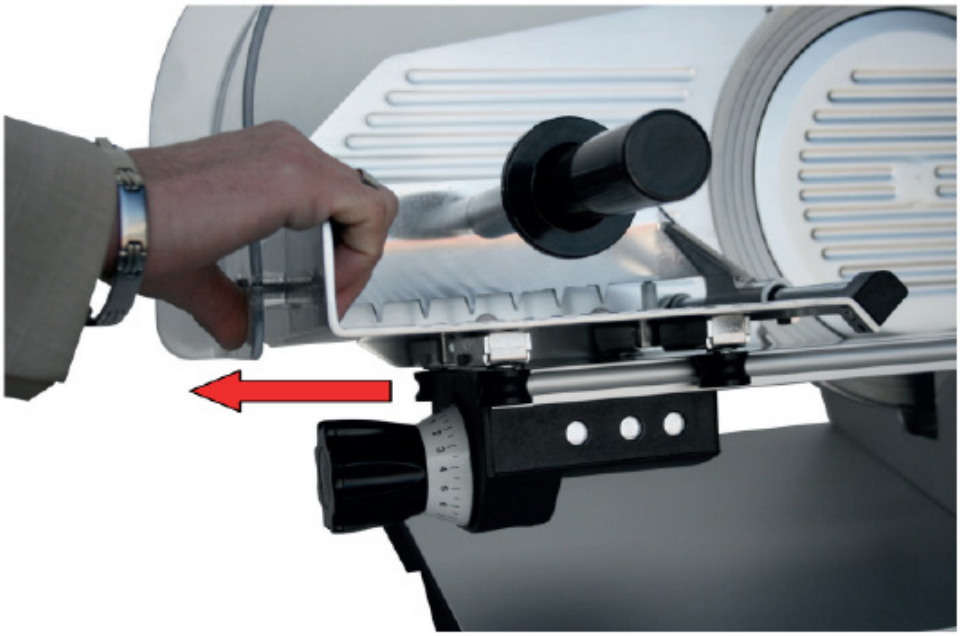

Removing the cutting table for washing

Fig. 6

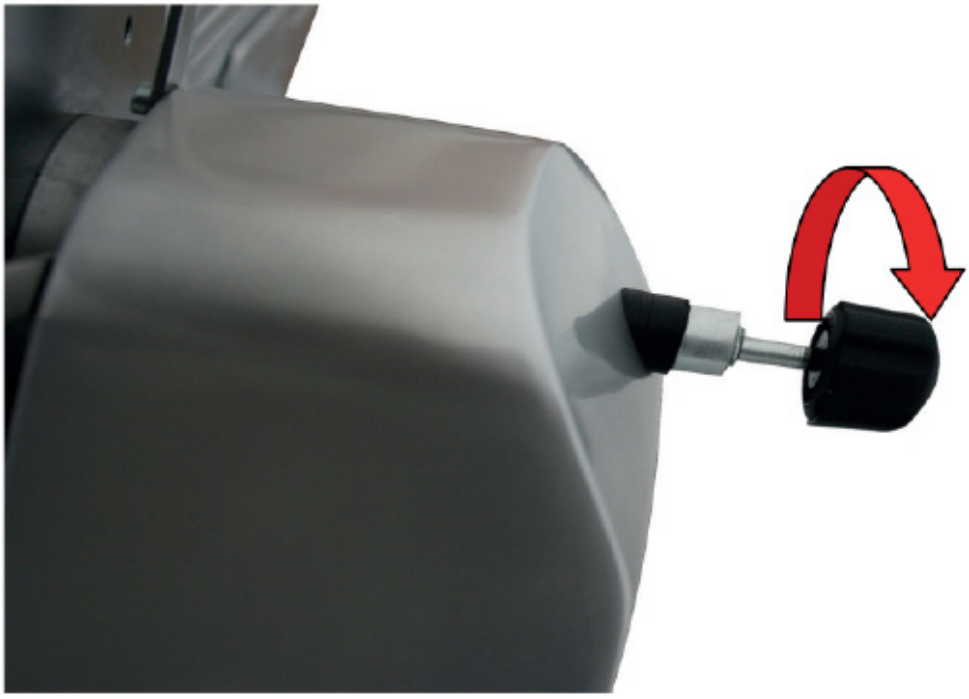

knife cover screw

Fig. 7

Removing the knife cover and knife squeegee

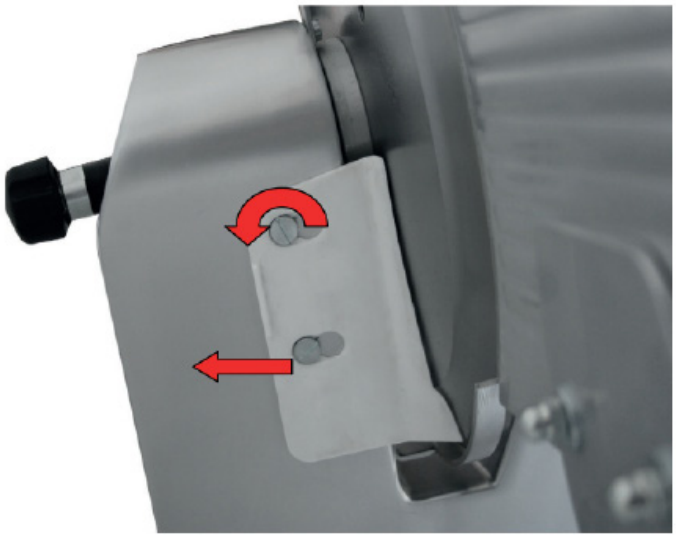

Fig. 8

Fixing the grinding device

A) Grinding wheel

B) Locking wheel

Mounting the grinding device on the GMS 300

The grinding device is fixed at the top of the blade.

Fig. 9

Fig. 10

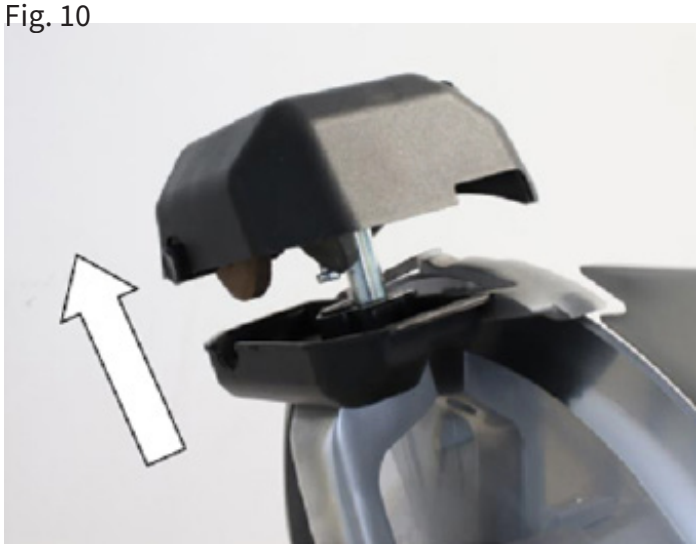

Fig. 11

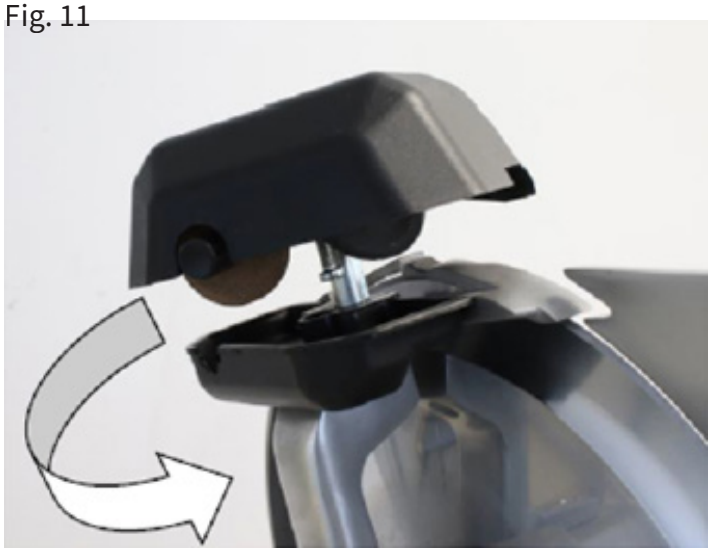

Fig. 12

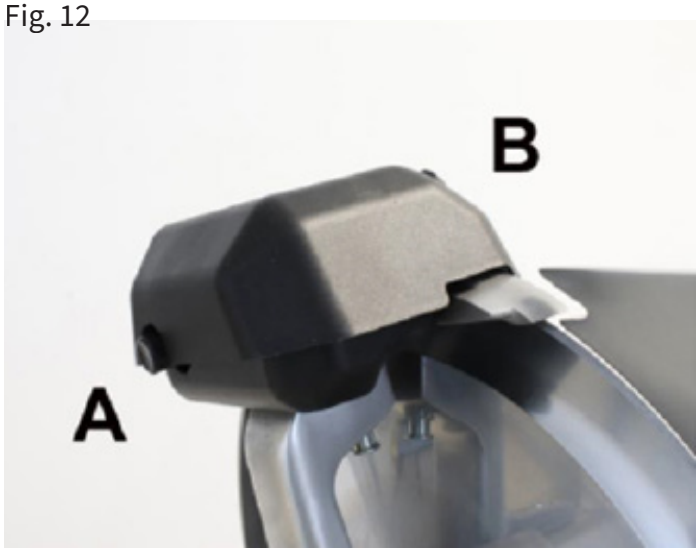

Focusing the GMS 300 fixed focus

Before sharpening the blade, clean the machine and degrease the blade thoroughly.

1. Plug in the machine
2. Lift the grinder and turn it 180° to bring the blade between the two grinding wheels. (Fig.9)
3. To focus, hold down the "A" button for 5/10 seconds.
4. To remove burrs, hold down the "B" button for a few seconds.
5. Stop the machine and return the grinder to its starting position (Fig. 10-11-12)

Note: Use the "A" button to sharpen and the "B" button to remove burrs. Follow the original blade plane drawing during the sharpening process. Replace the blade when the clearance between the ring and the blade is greater than 6 mm.

Fig. 13

Warning labels

use and maintain only
in accordance with the operating instructions.

8. CLEANING AND MAINTENANCE

It is recommended to have the device checked with a specialist service at least once a year. All the interventions in the device can only be carried out by a qualified person who has the authorization to do so. **CAUTION!** The device must not be cleaned with direct or pressure water. Clean the equipment daily. Daily maintenance extends the life and efficiency of the equipment. Always turn off the main inlet to the device. Wash the stainless steel parts with a damp cloth with a detergent without coarse particles and wipe dry. Do not use abrasive or corrosive cleaning agents. Attention! Before using the device, it is necessary to remove the protective foil from the entire surface, and then wash it well with water with detergent, and then wipe it with a damp cloth. **ALERT!** The warranty does not apply to all consumables subject to normal wear (rubber seals, bulbs, glass and plastic parts, etc.). The warranty also does not apply to the device if the installation is not carried out in accordance with the instructions - an authorized worker according to the corresponding standards and if the equipment was unprofessionally manipulated (interventions in the internal equipment, etc.) or were operated by unhappy staff and contrary to the instructions for use, further The warranty does not apply to damage by natural effects or other external intervention. **Required service organization 2 times a year. After the lifetime, the shipping packaging and equipment are submitted to the collection, according to the regulations on waste management and hazardous waste.**